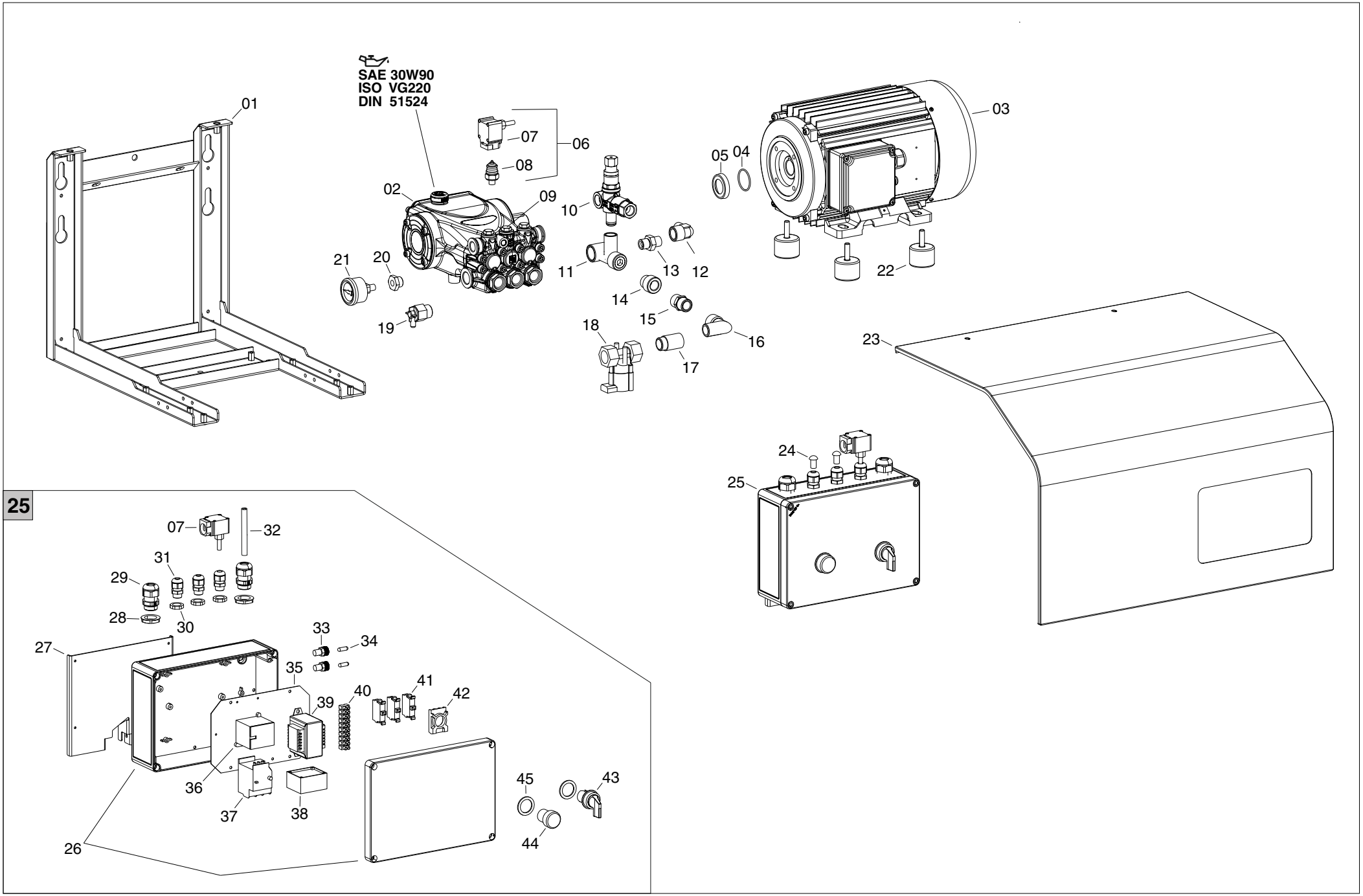
SAE 30W90
ISO VG220
DIN 51524
01
02
03
04
05
06
07
08
09
10
11
12
13
14
15
16
17
18
19
20
21
22
23
24
25
25
07
32
31
29
28
30
27
33
34
35
39
40
41
42
36
37
38
45
43
44
26

FOGGY 720T HD

PL01/18			DaN.°serie	DeNo.Serie	VonMasch.Nr.	FromS/N
			3210600101			
POS	**P/N**	**LEGENDA**	**DESCRIZIONE**	**DESCRIPTION**	**BESCHREIBUNG**	**DESCRIPTION**
01	B.CRZN00675	-	Telaio	Châssis	Gestell	Frame
02	B.POMP00026	E2B1712 DX	Pompa	Pompe	Pumpe	Pump
03	B.MOAC00043	3.5 kW - 400V/50Hz	Motore	Moteur	Motor	Motor
04	B.GUAR00137	1,78 x 34,65	Guarnizione OR	Anneau O'R	O-Ring	O-ring
05	B.CRDS00774	-	Raccordo	Raccord	Fitting	Fitting
06	B.MEIP00058	1/8" - 25 bar	Pressostato	Pressostat	Druckdose	Pressure switch
07	B.MEIP00059	-	Pressostato - Assieme elettrico	Pressostat - Assemblage électrique	Druckdose - Elektrische Montage	Pressure switch - Electrical assembly
08	B.MEIP00086	-	Pressostato - Assieme idraulico	Pressostat - Assemblage hydraulique	Druckdose - Hydraulische Montage	Pressure switch - Hydraulic assembly
09	B.RCVR00278-1	M18x1.5x10 D1/8" - Ni	Tappo	Bouchon	Stöpsel	Cap
10	B.VLRG00016	VRF2	Valvola bypass	By-pass vanne	By-pass Ventil	By-pass valve
11	B.VLRG00017	VRF2-E1/E2/E3	Collettore	Collecteur	Verteiler	Manifold
12	I30711	3/8"M - 3/8F - 90°	Raccordo	Raccord	Fitting	Fitting
13	I20102	3/8"M - 3/8"M	Raccordo	Raccord	Fitting	Fitting
14	B.RCVR00274	1/2"M - 1/2"F - L=15	Raccordo	Raccord	Fitting	Fitting
15	B.RCVR00011	1/2"M - 1/2"M	Raccordo	Raccord	Fitting	Fitting
16	I20305	2" - 90°	Raccordo	Raccord	Fitting	Fitting
17	B.RCVR00063	1/2"M - 1/2"M	Raccordo	Raccord	Fitting	Fitting
18	B.MEVR00357	EV 230V	Elettrovalvola	Electrovanne	Magnetventil	Solenoid valve
19	E50416	1/2"	Valvola termostatica	Vianne Thermostatic	Thermostatisches ventil	Thermostatic valve
20	I20216	3/8"M - 1/8"F	Raccordo	Raccord	Fitting	Fitting
21	B.CCID00029	D40 - 1/8"M	Manometro	Manomètre	Manometer	Pressure gauge
22	B.CMSP00111	-	Antivibrante	Plots antivibratoires	Schwingungsdämpfende Elemente	Vibration damping elements
23	G30022	-	Carrozzeria	Carrosserie	Karrosserie	Body
24	B.CCEL00004	-	Tappo	Bouchon	Stöpsel	Cap
25	B.CREL20300	-	Quadro elettrico	Coffret éléctrique	Schaltkasten	El. control box
26	B.MEVR00332-01	-	Scatola plastica	Boîte plastique	Gehäuse, Kunststoff	El. components box
27	B.CRZN00687	-	Staffa supporto	Étrier support	Trägerbügel	Support bracket
28	B.MEVR00292	PG 16	Dado per pressacavo	Ecrou pour presse étoupe	Mutter für Kabeldurchgang	Cable fastener nut
29	B.MEVR00291	PG 16	Pressacavo	Presse étoupe	Kabeldurchgang	Cable fastener
30	E20932	PG 9	Dado per pressacavo	Ecrou pour presse étoupe	Mutter für Kabeldurchgang	Cable fastener nut
31	E20943	PG 9	Pressacavo	Presse étoupe	Kabeldurchgang	Cable fastener
32	G30004-2	L = 5,8 m	Cavo alimentazione elettrica	Câble d'alimentation	Stromversorgungskabel	Power cord
33	B.MEVR00326	5 x 20	Portafusibile	Porte fusible	Sicherungshalter	Fuse holder
34	E10326	0,5A - 5 x 20	Fusibile	Fusible	Sicherung	Fuse
35	B.CRZN00688	-	Piastra supporto	Plaque support	Montageplatte	Support plate
36	B.METR00046	B6 24V	Teleruttore	Contacter	Relaisschalter	Contactor
37	B.METR00047	T16 5.7-7.6	Interruttore protezione motore	Disjoncteurs moteurs	Motorschutzschalter	Manual Motor Starter
38	B.CCEL00005	-	Temporizzatore	Minuteur	Timer	Timer
39	B.METR00028	25VA 230/380/24V	Autotrasformatore	Autotransformateur	Spartransformator	Autotransformer
40	B.MEVR00028	12 x 2 mm2	Morsettiera	Barrette de connection	Klemmenleiste	Terminal board
41	B.MEIP00067	-	Contatto ausiliario	Contacts auxiliaires	Hilfskontakt	Auxiliary contact
42	B.MEIP00066	-	Staffa	Étrier	Bügel	Stirrup
43	B.MEIP00065	I - 0 - II	Interruttore	Interrupteur	Schalter	Switch

PL01/18			DaN.°serie	DeNo.Serie	VonMasch.Nr.	FromS/N
			3210600101			
POS	P/N	LEGENDA	DESCRIZIONE	DESCRIPTION	BESCHREIBUNG	DESCRIPTION
44	B.MEIP00068	-	Pulsante riarmo	Poussoir réarmement	Reset-Taste	Reset button
45	MT.391951	D33 x D24 x 2	Rondella	Rondelle	Unterlegscheibe	Washer