IDROPULITRICI PROFESSIONALI
NETTOYEURS PROFESSIONNELS
HOCHDRUCKREINIGER
PROFESSIONAL HIGH PRESSURE CLEANERS
HIDROLIMPIADORAS PROFESIONALES

COMBY

Idropulitrice acqua calda
Nettoyeur à eau chode
Heisswasser-Hochdruckreiniger
Hot water high pressure washer
Hidrolimpiadora agua caliente

L-DC022.00-BM

28/08/2017

GR. LAM. COMBY

EXPLODED VIEW

TABLE N° EXPL00194

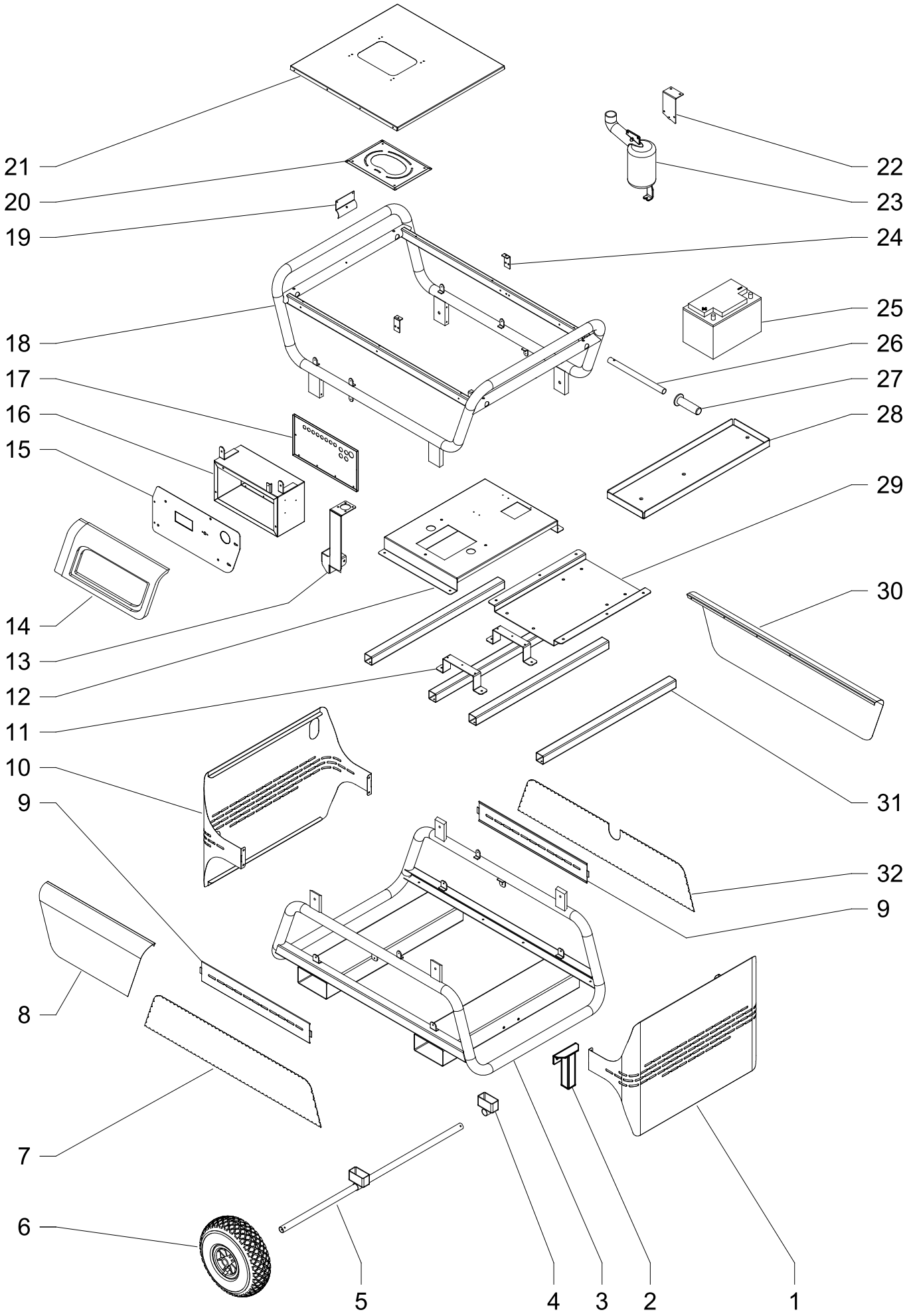

TABLE N° EXPL00194	SPARE PARTS LIST	GR. LAM COMBY	28/08/2017

REF	CODE	QTY	DESCRIPTION	DENOMINATION	BESCHREINBUNG	DESCRIPCION	DESCRIZIONE	TECNICHAL FEATURES
01	B. CRDS00958	01	HOOD	CAPOT	HAUBE	COFRE	COFANO	
02	B. CRVR00781	01	SUPPORT	SUPPORT	HALTER	SOPORTE	SUPPORTO	
03	B. CRVR00764	01	FRAME	CHASSIS	GERUST	CHASIS	TELAIO	
04	B. CRVR00782	02	SUPPORT	SUPPORT	HALTER	SOPORTE	SUPPORTO	
05	B. CRVR00774	01	AXLE	AXE	ACHESE	EJE	ASSE	
06	B. RUOT00040	02	WHEEL	ROUE	LAUFRAD	RUEDA	RUOTA	
07	B. CRVR00775	01	CRANKCASE	CARTER	GEHAUSE	CARTER	CARTER	
08	B. CRDS00961	01	HOOD	CAPOT	HAUBE	COFRE	COFANO	
09	B. CRDS00962	02	CRANKCASE	CARTER	GEHAUSE	CARTER	CARTER	
10	B. CRDS00965	01	HOOD	CAPOT	HAUBE	COFRE	COFANO	
11	B. CRVR00776	01	BRACKET	ENTRIER	BUGEL	GRAPA	STAFFA	
12	B. CRVR00762	01	FRAME	CHASSIS	GERUST	CHASIS	TELAIO	
13	B. CRVR00766	01	BRACKET	ENTRIER	BUGEL	GRAPA	STAFFA	
14	B. PLDS00370	01	INSTRUM. PANEL	TAB. DE BORD	ARM. BRETT	CRUSCOTTO	CRUSCOTTO	
15	B. CRVR00780	01	COVER	COUVERCLE	DECKEL	TAPA	COPERCHIO	
16	B. CRVR00769	01	BOX	BOÎTE	KASTEN	CAJA	SCATOLA	
17	B. CRVR00770	01	COVER	COUVERCLE	DECKEL	TAPA	COPERCHIO	
18	B. CRVR00765	01	FRAME	CHASSIS	GERUST	CHASIS	TELAIO	
19	B. CRDS00966	01	BRACKET	ENTRIER	BUGEL	GRAPA	STAFFA	
20	B. CRDS00968	01	HOOD	CAPOT	HAUBE	COFRE	COFANO	
21	B. CRDS00959	01	HOOD	CAPOT	HAUBE	COFRE	COFANO	
22	B. CRVR00767	01	BRACKET	ENTRIER	BUGEL	GRAPA	STAFFA	
23	B. PLDS00317	01	TANK	RESERVOIR	TANK	DEPOSITO	SERBATOIO	
24	B. CRZN00703	01	BRACKET	ENTRIER	BUGEL	GRAPA	STAFFA	
25	B. 121AC132	01	BATTERY	BATTERIE	BATTERIE	BATERIA	BATTERIA	
26	B. CRVR00783	02	HOSE	TUYAU	ROHR	TUBO	TUBO	
27	B. CMMP00083	01	KNOB	POIGNEE	VERSTELLGRIFF	MANOPOLA	MANOPOLA	
28	B. CRVR00772	01	SUPPORT	SUPPORT	HALTER	SOPORTE	SUPPORTO	
29	B. CRVR00763	01	PLATE	PLAQUE	PLATTE	SOPORTE	PIASTRA	
30	B. CRDS00960	01	HOOD	CAPOT	HAUBE	COFRE	COFANO	
31	B. CRVR00777	04	FRAME	CHASSIS	GERUST	CHASIS	TELAIO	
32	B. CRVR00778	01	CRANKCASE	CARTER	GEHAUSE	CARTER	CARTER	

TABLE N° EXPL00195	EXPLODED VIEW	GR. PUMP-MOTOR COMBY	28/08/2017

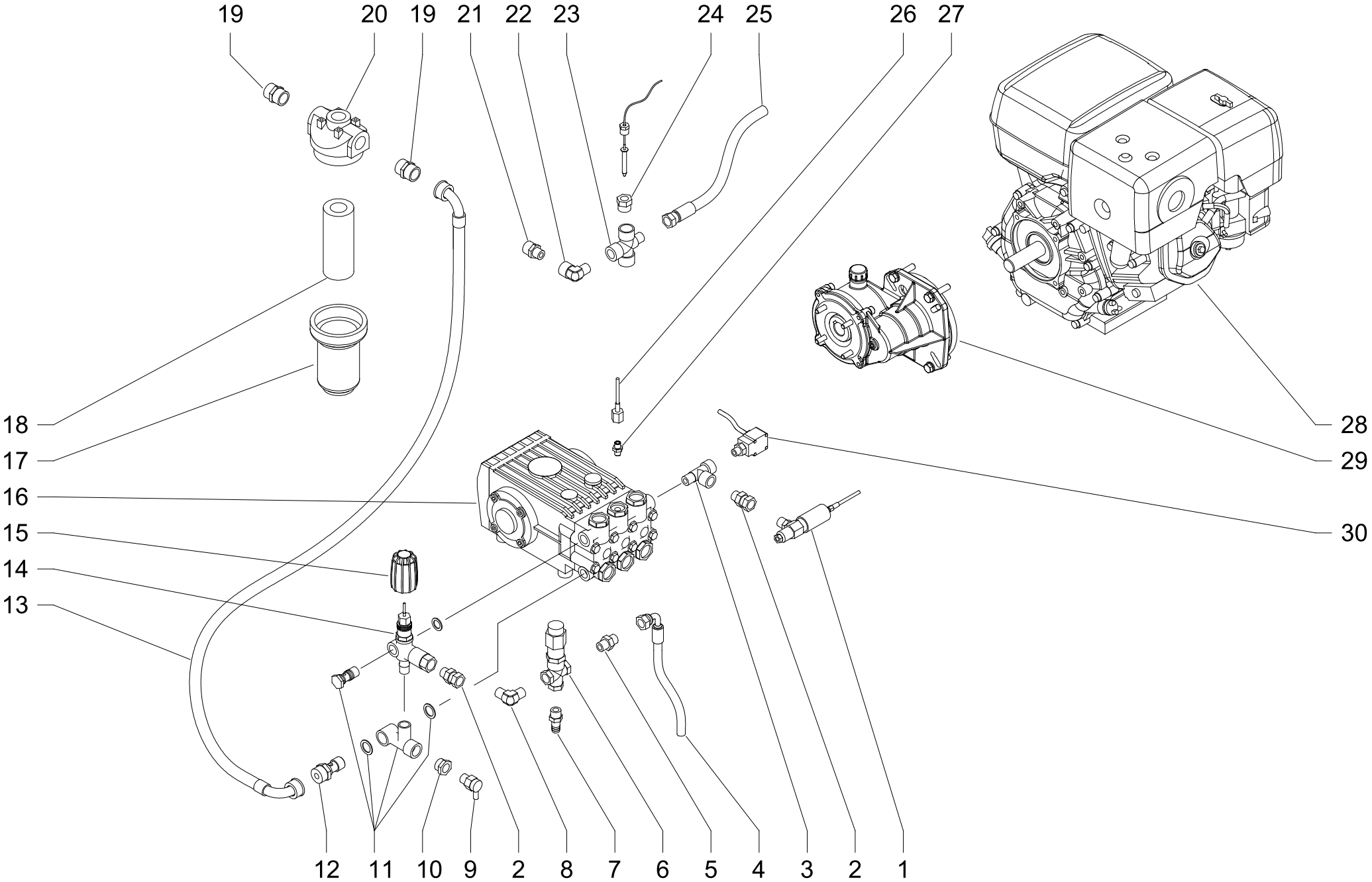

TABLE N° EXPL00195 | **SPARE PARTS LIST** | GR. PUMP-MOTOR COMBY | 28/08/2017

REF	CODE	QTY	DESCRIPTION	DENOMINATION	BESCHREINBUNG	DESCRIPCION	DESCRIZIONE	TECNICHAL FEATURES
01	B. VLRG00025	01	VALVE	SOUPAPE	VENTIL	VALVULA	VALVOLA	
02	I20602	02	CONNECTOR	RACCORD	VERBIND. STUCK	RACORD	RACCORDO	
03	I30101	03	CONNECTOR	RACCORD	VERBIND. STUCK	RACORD	RACCORDO	
04	B. TURR00029	01	HOSE	TUYAU	ROHR	TUBO	TUBO	
05	I20102	01	NIPPLE	NIPPLE	NIPPEL	NIPLO	NIPPLO	
06	B. VLRG00042	01	VALVE	SOUPAPE	VENTIL	VALVULA	VALVOLA	
07	B. RCVR00110	01	HOSE FITTING	RACC. P. TUYAU	SCHLAUCH HALTER	PORTAMANGUERA	PORTAGOMMA	
08	I30710	01	CONNECTOR	RACCORD	VERBIND. STUCK	RACORD	RACCORDO	
09	E50414	01	VALVE	SOUPAPE	VENTIL	VALVULA	VALVOLA	
10	I20201	01	REDUCTION	RÉDUCTION	VERKLEINERUNG	REDUCCIÓN	RIDUZIONE	
11	B. VLRG00017	01	VALVE	SOUPAPE	VENTIL	VALVULA	VALVOLA	
12	B. RCVR00202	01	CONNECTOR	RACCORD	VERBIND. STUCK	RACORD	RACCORDO	
13	B. TURR00059	01	HOSE	TUYAU	ROHR	TUBO	TUBO	
14	B. VLRG00016	01	VALVE	SOUPAPE	VENTIL	VALVULA	VALVOLA	
15	B. CMMP00165	01	KNOB	POIGNEE	VERSTELLGRIFF	MANOPOLA	MANOPOLA	
16	I10262	01	PUMP	POMPE	PUMPE	BOMBA	POMPA	
17	B. CMMP00169	01	FILTER	FILTRE	FILTER	FILTRO	FILTRO	
18	B. FILT00038	01	FILTER	FILTRE	FILTER	FILTRO	FILTRO	
19	B. RCVR00004	01	NIPPLE	NIPPLE	NIPPEL	NIPLO	NIPPLO	
20	B. RCVR00255	01	FILTER	FILTRE	FILTER	FILTRO	FILTRO	
21	I20920	01	NIPPLE	NIPPLE	NIPPEL	NIPLO	NIPPLO	
22	I30711	01	CONNECTOR	RACCORD	VERBIND. STUCK	RACORD	RACCORDO	
23	B. RCVR00194	01	CONNECTOR	RACCORD	VERBIND. STUCK	RACORD	RACCORDO	
24	I30307	01	REDUCTION	RÉDUCTION	VERKLEINERUNG	REDUCCIÓN	RIDUZIONE	
25	B. TURR00004	01	HOSE	TUYAU	ROHR	TUBO	TUBO	
26	B. TUAP00005	01	HOSE	TUYAU	ROHR	TUBO	TUBO	
27	I20104	01	NIPPLE	NIPPLE	NIPPEL	NIPLO	NIPPLO	
28	B. MOSC00006	01	MOTOR	MOTEUR	MOTOR	MOTOR	MOTORE	
29	B. RCVR00012	01	GEARBOX	REDUCTEUR	GETRIEB	REDUCTOR	RIDUTTORE	
30	B. MEIP00052	01	PRESSURE SWITCH	PRESSOSTAT	DRUCKSCHALTER	INTERR. PRESIÓN	PRESSOSTATO	

19/07/2017

GR. BOILER-FUN COMBY

EXPLODED VIEW

TABLE N° EXPL00196

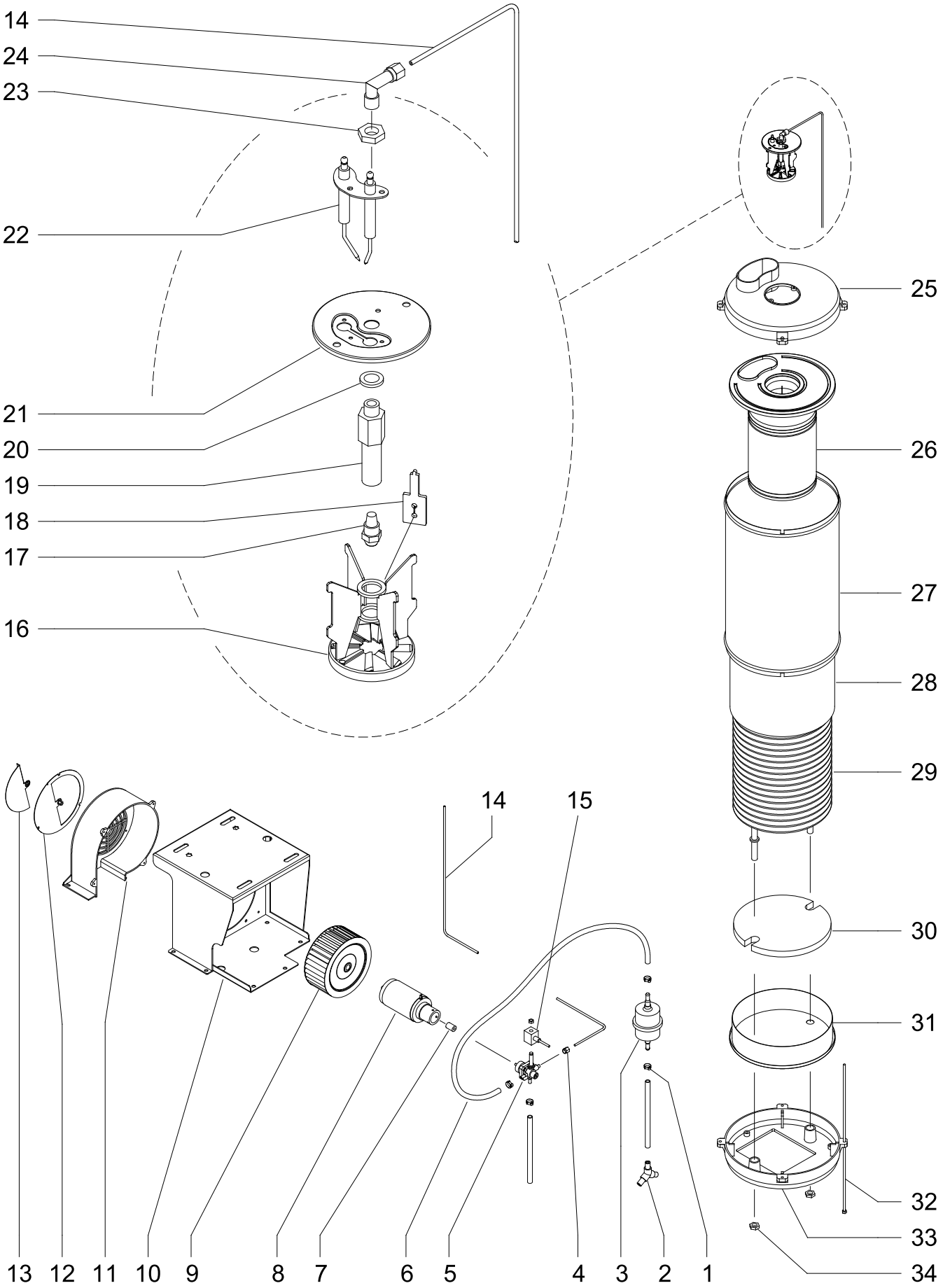

TABLE N° EXPL00196 | **SPARE PARTS LIST** | GR. BOILER-FAN COMBY | 13/12/2017

REF	CODE	QTY	DESCRIPTION	DENOMINATION	BESCHREINBUNG	DESCRIPCION	DESCRIZIONE	TECNICHAL FEATURES
01	B. VTSP00110	06	RING	ANNEAU	RING	ANILLO	FASCETTA	
03	I30414	01	FILTER	FILTRE	FILTER	FILTRO	FILTRO	
04	I31126	01	CONNECTOR	RACCORD	VERBIND. STUCK	RACORD	RACCORDO	
05	B. T20470	01	PUMP	POMPE	PUMPE	BOMBA	POMPA	
06	B TUFL01012	01	HOSE	TUYAU	ROHR	TUBO	TUBO	
07	B. CRDS00971	02	FLEX. COUPLING	ACCOUPLEMENT FL	FLEX. KOPPELUNG	ACOPLADOR FLEX.	GIUNTO	
08	B. MOCC00019	01	MOTOR	MOTEUR	MOTOR	MOTOR	MOTORE	
09	T10255	01	FAN	HELICE	LUFTERRAD	TURBINA	VENTOLA	
10	B. CRVR00703	01	SUPPORT	SUPPORT	HALTER	SOPORTE	SUPPORTO	
11	C10323	01	SPIRAL FAN	ECROU VENTIL.	SCHNECKE VENTIL	ESPIRAL VENTIL.	COCLEA VENTIL.	
12	B. CRZN00665	01	SUPPORT	SUPPORT	HALTER	SOPORTE	SUPPORTO	
13	B. CRZN00666	01	SHUTTER	OBTURATEUR	SCHALTER	VENTANILLA	SERRANDA	
14	B. RCVR00180	01	HOSE	TUYAU	ROHR	TUBO	TUBO	
15	E10698	01	COIL	BOBINE	SPULE	BOBINA	BOBINA	
16	B. CRDS00780	01	TURBULATOR	TURBULATEUR	TURBULATOR	TURBULADOR	TURBOLATORE	
17	T20370	01	NOZZLE	BUSE	DUSE	BOQUILLA	UGELLO	
18	B. CRDS00782	01	BRACKET	ENTRIER	BUGEL	GRAPA	STAFFA	
19	I30688	01	CONNECTOR	RACCORD	VERBIND. STUCK	RACORD	RACCORDO	
20	I30685	01	WASHER	RONDELLE	DICHTUNG	ARANDELLA	RONDELLA	
21	B. CRDS00777	01	FLANGE	BRIDE	FLANSCH	BRIDA	FLANGIA	
22	B. MEVR00320	01	ELECTRODES	ELECTRODES	ELEKTRODEN	ELECTRODOS	ELETTRODI	
23	I31034	01	NUT	ECROU	SCHRAUBMUTTER	TUERCA	DADO	
24	I30856	01	CONNECTOR	RACCORD	VERBIND. STUCK	RACORD	RACCORDO	
25	B. CRVR00706	01	COVER	COUVERCLE	DECKEL	TAPA	COPERCHIO	
26	B. CRAS00101	01	COVER	COUVERCLE	DECKEL	TAPA	COPERCHIO	
27	B. CRVR00705	01	CYLINDER	CYLINDRE	ZYLINDER	CIINDRO	CILINDRO	
28	B. CRZN00667	01	CYLINDER	CYLINDRE	ZYLINDER	CIINDRO	CILINDRO	
29	P20212	01	HEATING COIL	SERPENTIN	ROHRSCHLANGE	SERPENTIN	SERPENTINA	
30	B. CMSP00122	01	BOILER BOTTOM	FOND CHAUDIERE	KESSELBODEN	FONDO CALDERA	FONDO CALDAIA	
31	B. CRDS00764	01	COVER	COUVERCLE	DECKEL	TAPA	COPERCHIO	
32	M10804	04	TIE ROD	TIRANT	ZUGSTANGE	TIRANTE	TIRANTE	
33	L01235	01	COVER	COUVERCLE	DECKEL	TAPA	COPERCHIO	
34	I31037	02	RING NUT	FRETTE	NUTMUTTER	CASQUILLO	GHIERA	

TABLE N° SCEL00034.1	EXPLODED VIEW	EL. DIAGRAM COMBY	25/07/2018

STANDARD

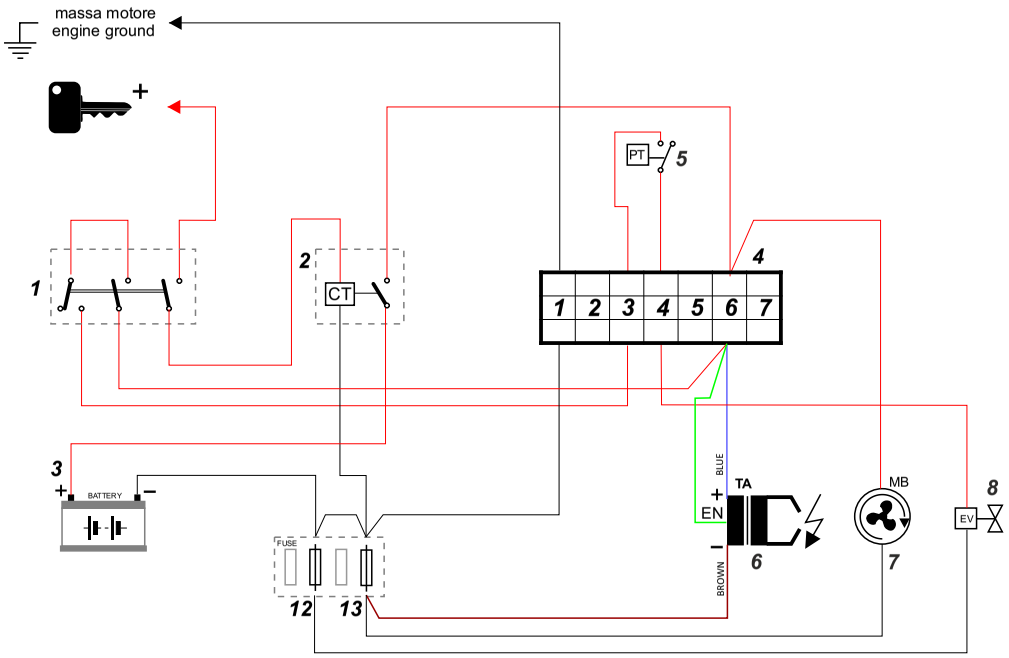

CON CONTROLLO FIAMMA
WITH FLAME CONTROL

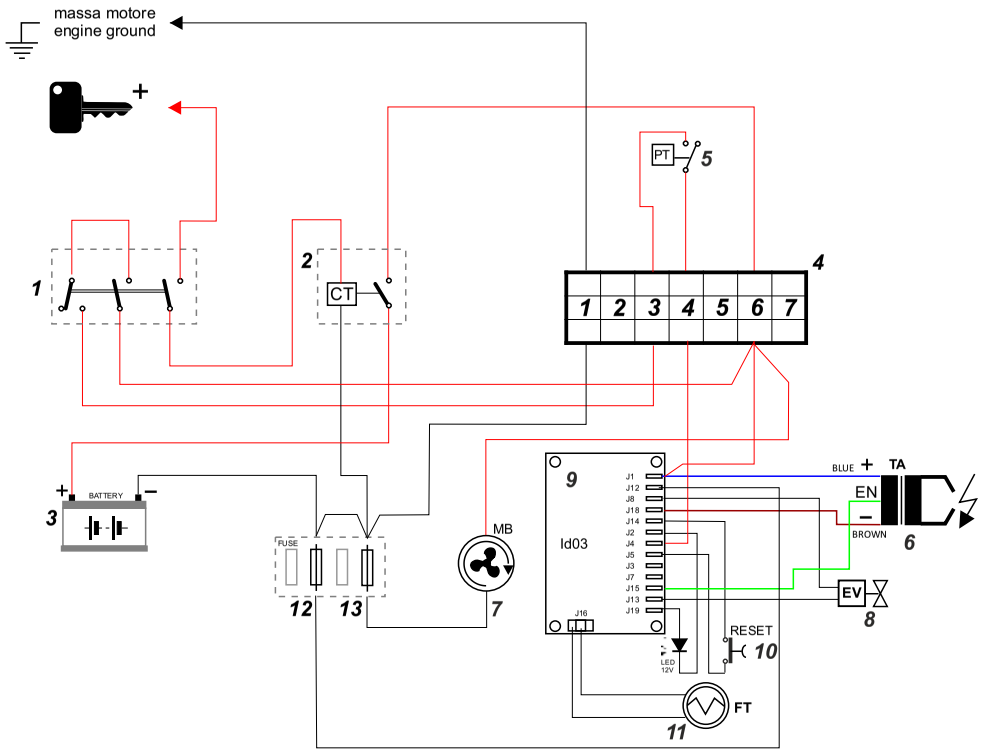

TABLE N° EXPL00197

SPARE PARTS LIST

EL. DIAGRAM COMBY

13/12/2017

REF	CODE	QTY	DESCRIPTION	DENOMINATION	BESCHREINBUNG	DESCRIPCION	DESCRIZIONE	TECNICHAL FEATURES
01	B. MEIP00051	01	THERMOSTAT	THERMOSTAT	THERMOSTAT	TERMOSTATO	TERMOSTATO	
02	B. METR00051	01	RELAY	RELAIS	RELAIS	RELE'	RELE'	
03	B. ACBT00000	01	BATTERY	BATTERIE	BATTERIE	BATERIA	BATTERIA	
04	E20317	01	CONNECTOR	CONNECTEUR	STECKER	CONECTADOR	CONNETTORE	
05	B. MEIP00052	01	PRESSURE SWITCH	PRESSOSTAT	DRUCKSCHALTER	INTERR. PRESIÓN	PRESSOSTATO	
06	B. METR00053	01	TRANSFORMER	TRANSFORMATEUR	TRANSFORMER	TRANSFORMADOR	TRASFORMATORE	
09	B. MESC00033	01	ELEC. CIRCUIT	CIRQUIT. ELECT.	ELEKTR. STROM.	CIRCUITO ELECT.	SCHEDA	
12	B. MEVR00103	01	FUSE	FUSIBLE	ABSCHMEL.HERUNG	FUSIBLE	FUSIBILE	5 A
13	B. MEVR00068	01	FUSE	FUSIBLE	ABSCHMEL.HERUNG	FUSIBLE	FUSIBILE	10 A

BIEMMEDUE S.p.A. - Via Industria, 12 - 12062 - CHERASCO (CN) - Italy
Tel. +39 0172 486111 - Fax +39 0172 488270
www.biemmedue.com - e-mail: bm2@biemmedue.com